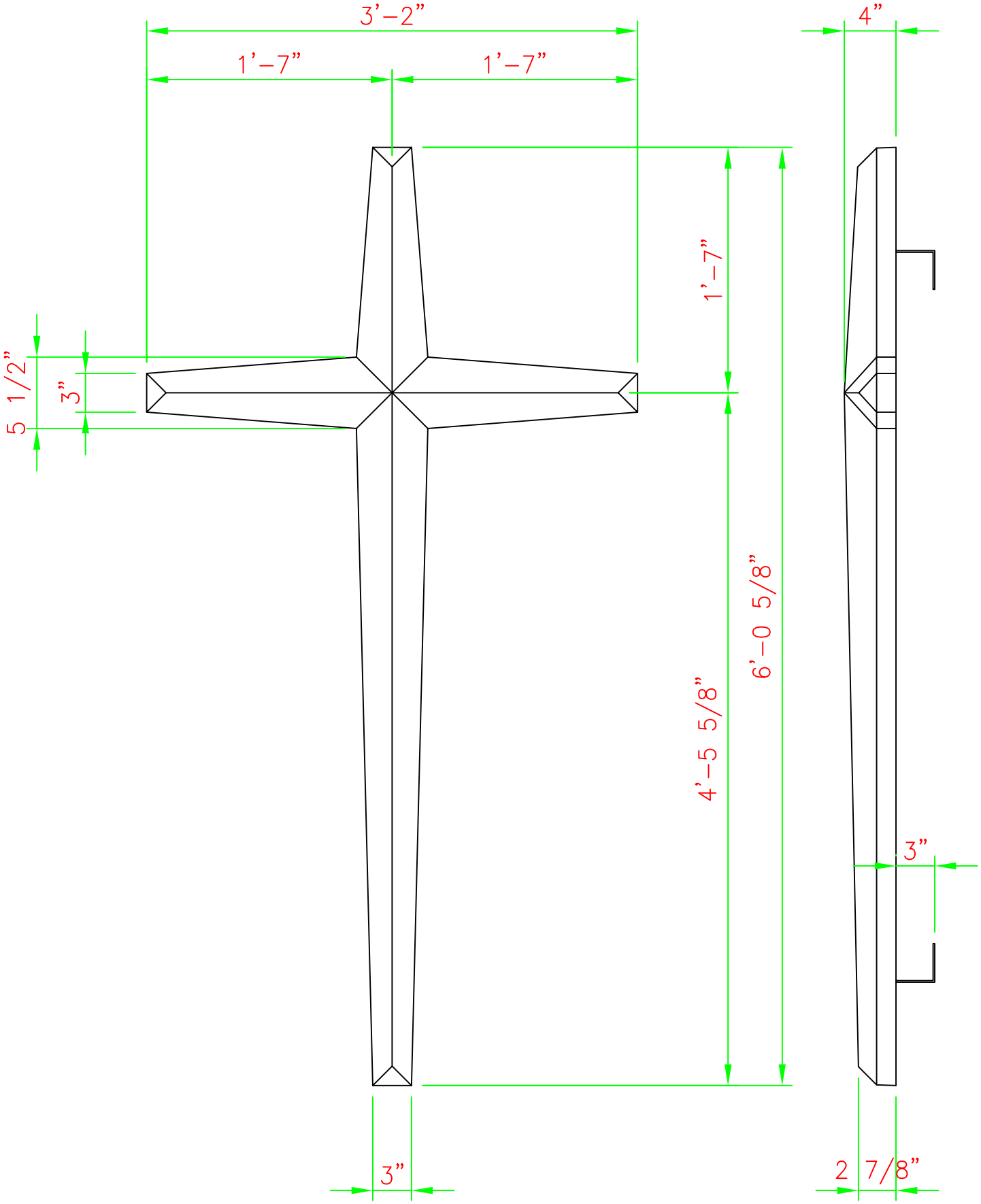

SUPERIOR FIBERGLASS, INC. PO BOX 1989 JACKSONVILLE, TEXAS 75766 800-527-8438	CR-6